H 209-1 1/2

Adapter sleeves for inch shafts

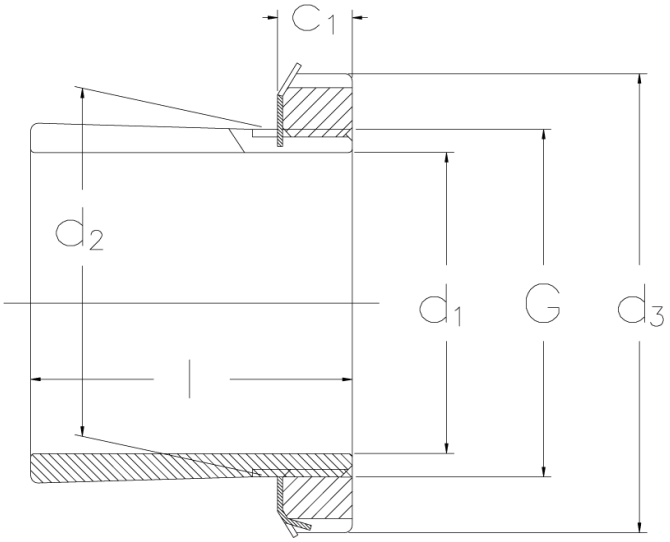

Technical data

d1 (Inch)	1 1/2
d2 (mm)	45
l (mm)	33
d3 (mm)	65
G	M 45x1,5
c1 (mm)	11
Weight (kg)	0.2
GTIN/EAN	4 055953 025989

Related products

KM 9
Locknuts with metric threads

MB 9
Locking washers with metric dimensions

© 2026 HSP Schwahlen GmbH, Langenfeld, Germany